Sayward Rd @ Hunt Road

Wednesday, March 04, 2020

The data presented here is for information purposes only and should not be considered authoritative for construction, geotechnical, engineering, navigational, legal, or other site-specific uses. The information shared is owned by the Transportation Division of the Engineering Department at the District of Saanich. Accuracy is not guaranteed.

ERING

Vehicle Turning Movement Survey
With Classification

Major Route: Sayward Rd
Minor Route: Hunt Road
Municipality: Saanich
Filename: Sayward Rd @ Hunt Rd-Mar 4, 2020.xlsx
Location #: TIN001550
Count ID: 202025
Date: March 4, 2020
Day-of-week: Wednesday

East/West Route: Hunt Road
Intersection Type: 3-leg east approach
Signalized?: No
Weather: Clear and dry

Vehicle Classifications: Vehicles and Peds
Bikes

This data is for Vehicles and Peds

Shift	Start	End	Duration
AM	7:30	9:30	2.00
MD			
PM	15:30	18:30	3.00
Total	**7:30**	**18:30**	**5.00**

Notes: 24-hour clock used for reporting (15-minute increments)
North Approach - southbound vehicles approaching intersection from the north
15x4 - 15 min volume (from maximum 15 minute period of movement/approach in peak hour period [*]) x 4
Pedestrians - N indicates pedestrians crossing north approach (east/west)

Comments:

Survey Data
Vehicles and Peds

Sayward Rd @ Hunt Road
Wednesday, March 4, 2020

Time	Sayward Rd				Fowler Road								Hunt Rd										
Period	NORTH Approach				SOUTH Approach				WEST Approach				EAST Approach				Total Volume		Peak	Crosswalks			
Begins	Left	Thru	Right	Total	Left	Thru	Right	Total	Left	Thru	Right	Total	Left	Thru	Right	Total	15-min	Hour		N	S	W	E
7:30	5	43		**48**		85	3	**88**					2		6	**8**	**144**			0	0		1
7:45	5	45		**50**		64	5	**69**					6		11	**17**	**136**			0	0		0
8:00	1	56		**57**		46	1	**47**					4		8	**12**	**116**			0	0		1
8:15	4	53		**57**		64	4	**68**					5		4	**9**	**134**	530	*	0	0		1
8:30	6	60		**66**		84	8	**92**					7		3	**10**	**168**	554	+	0	0		0
8:45	4	53		**57**		74	1	**75**					10		10	**20**	**152**	570	*	0	0		0
9:00	5	55		**60**		54	4	**58**					6		9	**15**	**133**	587	*	0	0		0
9:15	4	39		**43**		57	8	**65**					6		5	**11**	**119**	572		0	0		0
n/a																							
n/a																							
n/a																							
n/a																							
n/a																							
n/a																							
n/a																							
n/a																							
n/a																							
n/a																							
n/a																							
Total	34	404		**438**		528	34	**562**					46		56	**102**	**1102**			0	0		3
n/a																							
n/a																							
n/a																							
n/a																							
n/a																							
n/a																							
n/a																							
n/a																							
n/a																							
n/a																							
n/a																							
n/a																							
n/a																							
n/a																							
n/a																							
n/a																							
n/a																							
n/a																							
Total																							
15:30	4	58		**62**		93	3	**96**					10		7	**17**	**175**			0	0		1
15:45	6	55		**61**		96	8	**104**					12		4	**16**	**181**			0	0		1
16:00	10	53		**63**		115	15	**130**					3		4	**7**	**200**		+	0	0		0
16:15	4	64		**68**		101	10	**111**					9		7	**16**	**195**	751	*	0	0		0
16:30	1	65		**66**		81	7	**88**					9		4	**13**	**167**	743	*	0	0		0
16:45	4	67		**71**		95	15	**110**					13		6	**19**	**200**	762	*	0	0		0
17:00	1	48		**49**		96	10	**106**					11		7	**18**	**173**	735		0	1		1
17:15	5	51		**56**		60	10	**70**					7		1	**8**	**134**	674		0	0		0
17:30	7	46		**53**		65	8	**73**					5		4	**9**	**135**	642		0	0		1
17:45	4	44		**48**		66	7	**73**					10		5	**15**	**136**	578		0	0		0
18:00	3	30		**33**		56	5	**61**					3		1	**4**	**98**	503		0	0		0
18:15	5	30		**35**		43	1	**44**					7		7	**14**	**93**	462		0	0		0
n/a																							
n/a																							
n/a																							
n/a																							
n/a																							
n/a																							
n/a																							
n/a																							
Total	54	611		**665**		967	99	**1066**					99		57	**156**	**1887**			0	1		4

AM Peak Period
Vehicles and Peds

Sayward Rd @ Hunt Road
Wednesday, March 4, 2020

Time Period Begins	Sayward Rd NORTH Approach Left	Thru	Right	Total	Fowler Road SOUTH Approach Left	Thru	Right	Total	WEST Approach Left	Thru	Right	Total	Hunt Rd EAST Approach Left	Thru	Right	Total	Total Volume 15-min	Hour	Peak	Crosswalks N	S	W	E	Conflict 15 min	Hr
7:30	5	43		48		85	3	88					2		6	8	144			0	0		1	99	
7:45	5	45		50		64	5	69					6		11	17	136			0	0		0	85	
8:00	1	56		57		46	1	47					4		8	12	116			0	0		1	64	
8:15	4	53		57		64	4	68					5		4	9	134	530	*	0	0		1	77	325
8:30	6	60		66		84	8	92					7		3	10	168	554	+	0	0		0	105	331
8:45	4	53		57		74	1	75					10		10	20	152	570	*	0	0		0	89	335
9:00	5	55		60		54	4	58					6		9	15	133	587	*	0	0		0	72	343
9:15	4	39		43		57	8	65					6		5	11	119	572		0	0		0	75	341
n/a																									
n/a																									
n/a																									
n/a																									
n/a																									
n/a																									
n/a																									
n/a																									
n/a																									
n/a																									
n/a																									
Total	34	404		**438**		528	34	**562**					46		56	**102**	1102			0	0		3		652
Avg Hr	17	202		**219**		264	17	**281**					23		28	**51**	551			0	0		2		

Peak hour of the intersection

Pk Hr	19	221		240		276	17	293					28		26	54	587	*		0	0		1		340
15x4	24	240		264		336	32	368					40		40	80	672	+		0	0		4		432
PHF	0.79	0.92		**0.91**		0.82	0.53	**0.80**					0.70		0.65	**0.68**	0.87			n/a	n/a		0.25		0.79

Peak hour of conflicting volumes for the intersection

Pk Hr	19	221		240		276	17	293					28		26	54	587	*		0	0		1		340
15x4	24	240		264		336	32	368					40		40	80	672	+		0	0		4		432
PHF	0.79	0.92		**0.91**		0.82	0.53	**0.80**					0.70		0.65	**0.68**	0.87			n/a	n/a		0.25		0.79

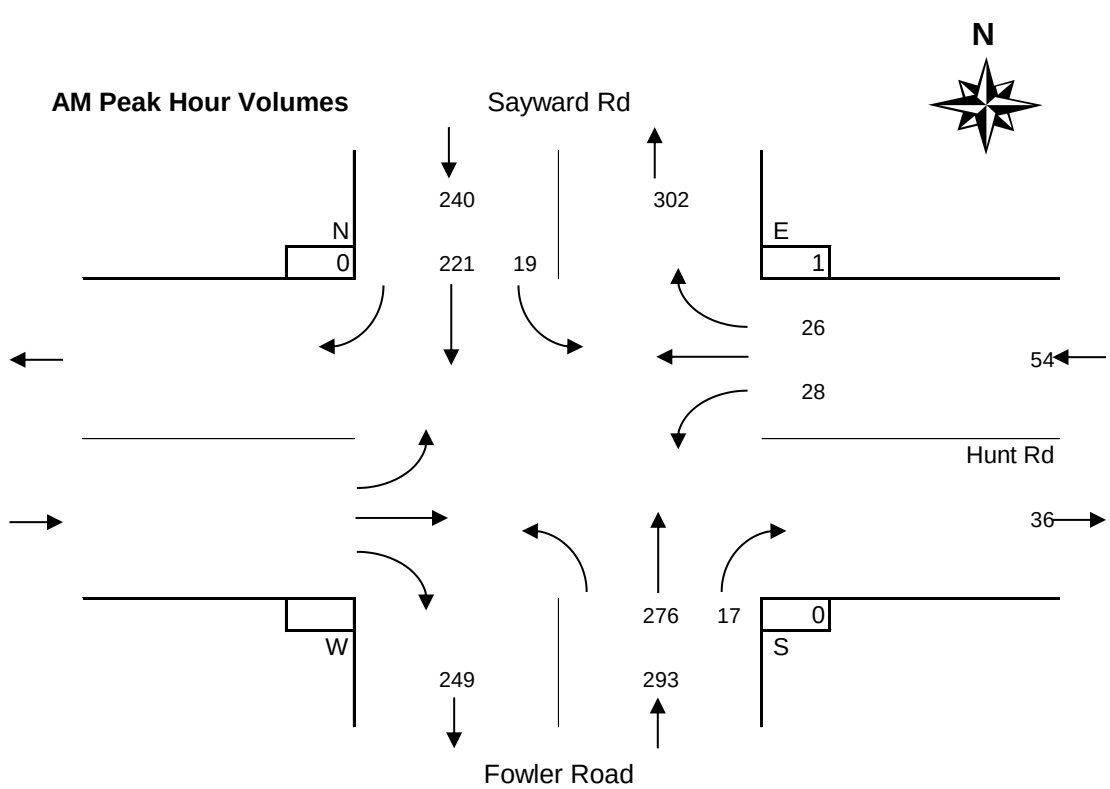

MD Peak Period
Vehicles and Peds

Sayward Rd @ Hunt Road
Wednesday, March 4, 2020

Time Period Begins	Sayward Rd NORTH Approach				Fowler Road SOUTH Approach								Hunt Rd EAST Approach				Total Volume		Peak	Crosswalks				Conflict	
	Left	Thru	Right	Total	Left	Thru	Right	Total	Left	Thru	Right	Total	Left	Thru	Right	Total	15-min	Hour		N	S	W	E	15 min	Hr
n/a																									
n/a																									
n/a																									
n/a																									
n/a																									
n/a																									
n/a																									
n/a																									
n/a																									
n/a																									
n/a																									
n/a																									
n/a																									
n/a																									
n/a																									
n/a																									
Total																									
Avg Hr																									

Peak hour of the intersection

Pk Hr																		*							
15x4																		+							
PHF																									

Peak hour of conflicting volumes for the intersection

Pk Hr																		*							
15x4																		+							
PHF																									

MD Peak Hour Volumes

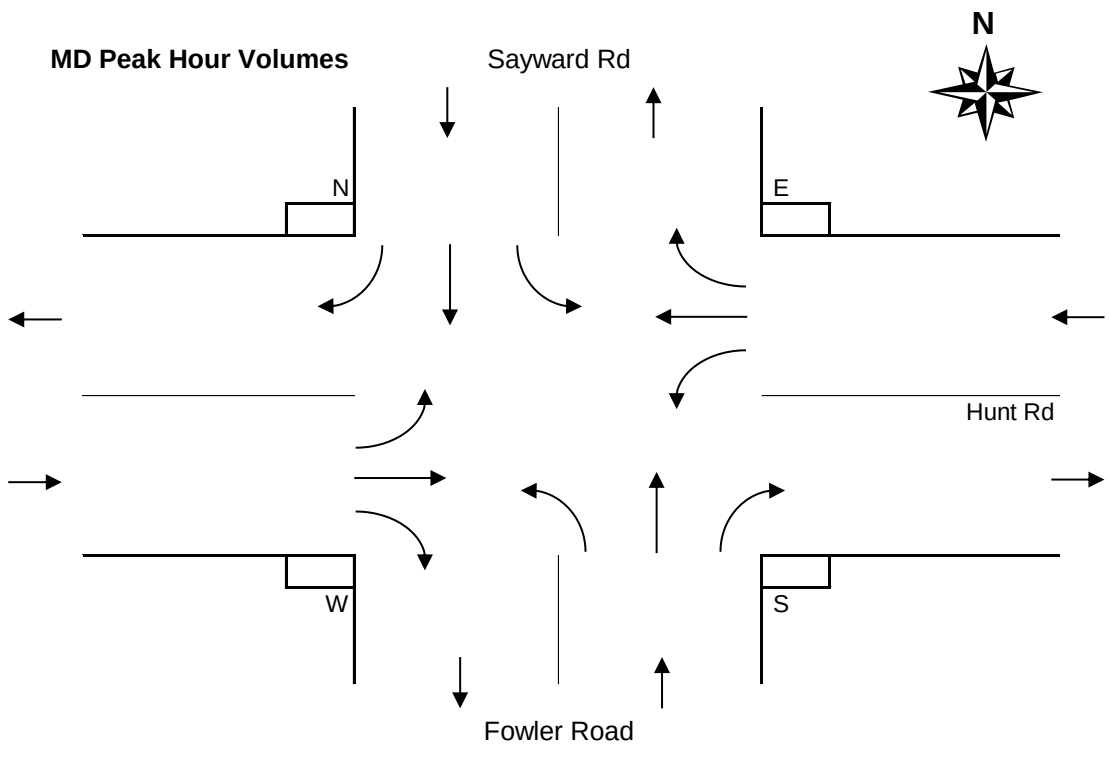

PM Peak Period
Vehicles and Peds

Sayward Rd @ Hunt Road
Wednesday, March 4, 2020

Time Period Begins	Sayward Rd NORTH Approach Left	Thru	Right	Total	Fowler Road SOUTH Approach Left	Thru	Right	Total	WEST Approach Left	Thru	Right	Total	Hunt Rd EAST Approach Left	Thru	Right	Total	Total Volume 15-min	Hour	Peak	Crosswalks N	S	W	E	Conflict 15 min	Hr
15:30	4	58		62		93	3	96					10		7	17	175			0	0		1	110	
15:45	6	55		61		96	8	104					12		4	16	181			0	0		1	122	
16:00	10	53		63		115	15	130					3		4	7	200		+	0	0		0	144	
16:15	4	64		68		101	10	111					9		7	16	195	751	*	0	0		0	124	500
16:30	1	65		66		81	7	88					9		4	13	167	743	*	0	0		0	98	488
16:45	4	67		71		95	15	110					13		6	19	200	762	*	0	0		0	127	493
17:00	1	48		49		96	10	106					11		7	18	173	735		0	1		1	118	467
17:15	5	51		56		60	10	70					7		1	8	134	674		0	0		0	82	425
17:30	7	46		53		65	8	73					5		4	9	135	642		0	0		1	85	412
17:45	4	44		48		66	7	73					10		5	15	136	578		0	0		0	87	372
18:00	3	30		33		56	5	61					3		1	4	98	503		0	0		0	67	321
18:15	5	30		35		43	1	44					7		7	14	93	462		0	0		0	56	295
n/a																									
n/a																									
n/a																									
n/a																									
n/a																									
n/a																									
n/a																									
n/a																									
Total	54	611		**665**		967	99	**1066**					99		57	**156**	1887			0	1		4		1219
Avg Hr	18	204		**222**		322	33	**355**					33		19	**52**	629			0	0		1		

Peak hour of the intersection

Pk Hr	19	249		268		392	47	439					34		21	55	762	*		0	0		0		492
15x4	40	268		284		460	60	520					52		28	76	800	+		0	0		0		612
PHF	0.48	0.93		**0.94**		0.85	0.78	**0.84**					0.65		0.75	**0.72**	0.95			n/a	n/a		n/a		0.80

Peak hour of conflicting volumes for the intersection

Pk Hr	24	230		254		405	36	441					34		22	56	751	*		0	0		2		499
15x4	40	256		272		460	60	520					48		28	68	800	+		0	0		4		608
PHF	0.60	0.90		**0.93**		0.88	0.60	**0.85**					0.71		0.79	**0.82**	0.94			n/a	n/a		0.50		0.82

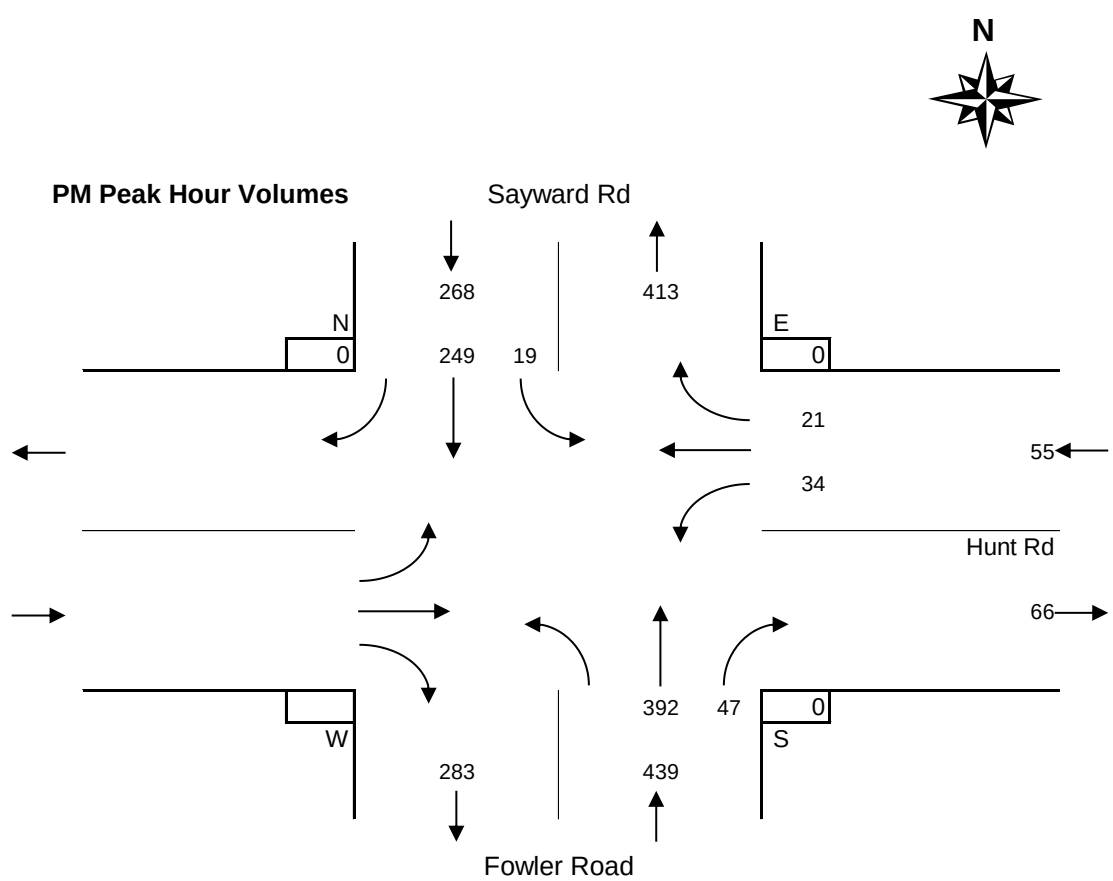

Period Hourly Averages
Vehicles and Peds

Sayward Rd @ Hunt Road
Wednesday, March 4, 2020

Entire Survey Period
5 Hours

	Sayward Rd				Fowler Road								Hunt Rd					Crosswalks			
	NORTH Approach				SOUTH Approach				WEST Approach				EAST Approach				Total				
	Left	Thru	Right	Total	Left	Thru	Right	Total	Left	Thru	Right	Total	Left	Thru	Right	Total	Volume	N	S	W	E
Total	88	1015		**1103**		1495	133	**1628**					145		113	**258**	2989	0	1		7
Avg Hr	18	203		**221**		299	27	**326**					29		23	**52**	598	0	0		1

AM Peak Period
2 Hours

	Sayward Rd				Fowler Road								Hunt Rd					Crosswalks			
	NORTH Approach				SOUTH Approach				WEST Approach				EAST Approach				Total				
Totals	Left	Thru	Right	Total	Left	Thru	Right	Total	Left	Thru	Right	Total	Left	Thru	Right	Total	Volume	N	S	W	E
Period	34	404		**438**		528	34	**562**					46		56	**102**	1102	0	0		3
Avg Hr	17	202		**219**		264	17	**281**					23		28	**51**	551	0	0		2

MD Peak Period
Hours

	Sayward Rd				Fowler Road								Hunt Rd					Crosswalks			
	NORTH Approach				SOUTH Approach				WEST Approach				EAST Approach				Total				
Totals	Left	Thru	Right	Total	Left	Thru	Right	Total	Left	Thru	Right	Total	Left	Thru	Right	Total	Volume	N	S	W	E
Total																					
Avg Hr																					

PM Peak Period
3 Hours

	Sayward Rd				Fowler Road								Hunt Rd					Crosswalks			
	NORTH Approach				SOUTH Approach				WEST Approach				EAST Approach				Total				
Totals	Left	Thru	Right	Total	Left	Thru	Right	Total	Left	Thru	Right	Total	Left	Thru	Right	Total	Volume	N	S	W	E
Total	54	611		**665**		967	99	**1066**					99		57	**156**	1887	0	1		4
Avg Hr	18	204		**222**		322	33	**355**					33		19	**52**	629	0	0		1

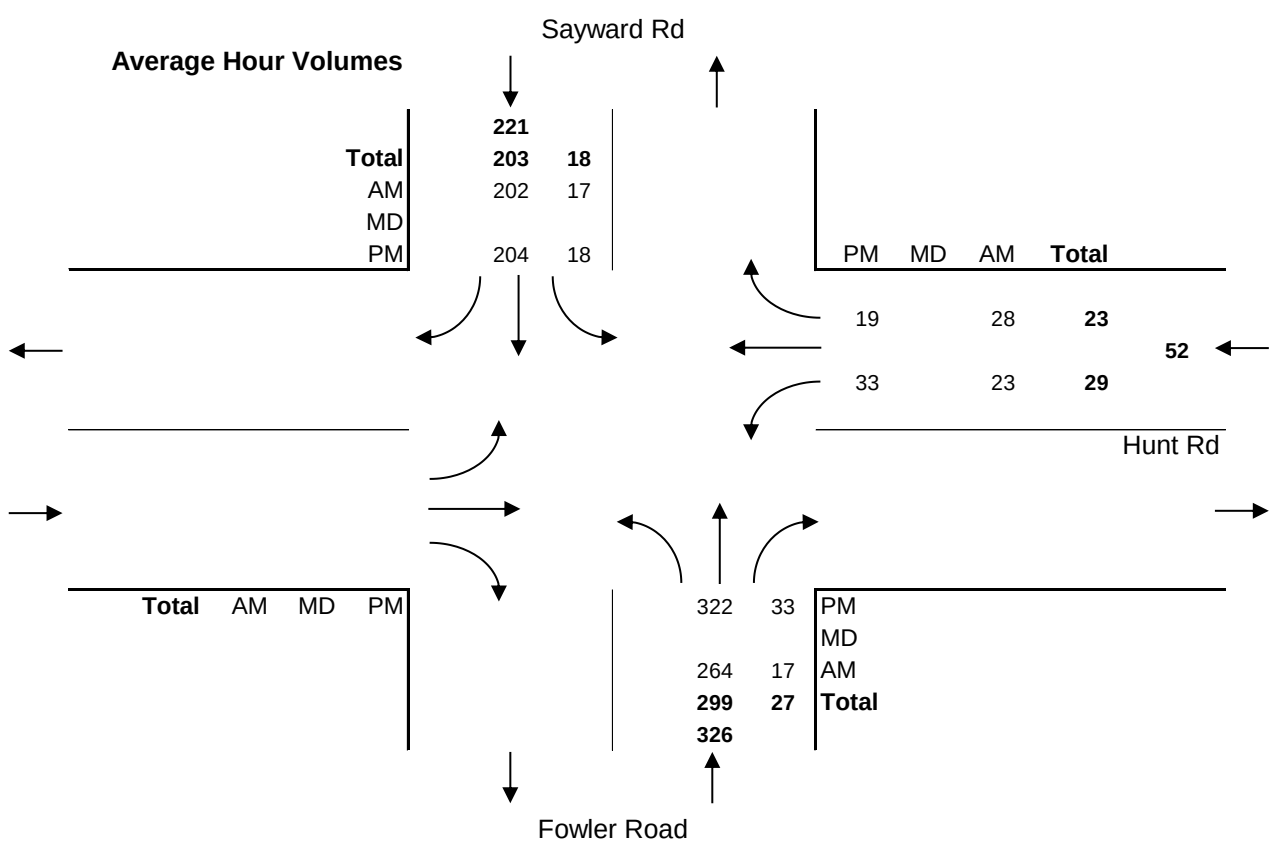

Vehicle Turning Movement Survey
With Classification

Major Route: Sayward Rd
Minor Route: Hunt Road
Municipality: Saanich
Filename: Sayward Rd @ Hunt Rd-Mar 4, 2020.xlsx
Location #: TIN001550
Count ID: 202025
Date: March 4, 2020
Day-of-week: Wednesday

East/West Route: Hunt Road
Intersection Type: 4-leg
Signalized?: No
Weather: Clear and dry

Vehicle Classifications: Vehicles and Peds
Bikes

This data is for Bikes

Shift	Start	End	Duration
AM	7:30	9:30	2.00
MD			
PM	15:30	18:30	3.00
Total	**7:30**	**18:30**	**5.00**

Notes: 24-hour clock used for reporting (15-minute increments)
North Approach - southbound vehicles approaching intersection from the north
15x4 - 15 min volume (from maximum 15 minute period of movement/approach in peak hour period [*]) x 4
Pedestrians - N indicates pedestrians crossing north approach (east/west)

Comments:

Survey Data
Bikes

Sayward Rd @ Hunt Road
Wednesday, March 4, 2020

Time	Sayward Rd				Fowler Road								Hunt Rd										
Period	NORTH Approach				SOUTH Approach				WEST Approach				EAST Approach				Total Volume		Peak				
Begins	Left	Thru	Right	Total	Left	Thru	Right	Total	Left	Thru	Right	Total	Left	Thru	Right	Total	15-min	Hour		N	S	W	E
7:30	1	2	0	**3**	0	0	4	**4**	0	0	0	**0**	0	0	0	**0**	**7**			0	0	0	0
7:45	0	0	0	**0**	0	0	0	**0**	0	0	0	**0**	0	0	0	**0**	**0**			0	0	0	0
8:00	0	0	0	**0**	0	1	1	**2**	0	0	0	**0**	0	0	0	**0**	**2**			0	0	0	0
8:15	0	0	0	**0**	0	1	0	**1**	0	0	0	**0**	1	0	0	**1**	**2**	11		0	0	0	0
8:30	0	0	0	**0**	0	1	3	**4**	0	0	0	**0**	1	0	0	**1**	**5**	9	*	0	0	0	0
8:45	0	0	0	**0**	0	2	1	**3**	0	0	0	**0**	0	0	0	**0**	**3**	12	*	0	0	0	0
9:00	0	0	0	**0**	0	0	6	**6**	0	0	0	**0**	0	0	0	**0**	**6**	16	+	0	0	0	0
9:15	0	0	0	**0**	0	0	1	**1**	0	0	0	**0**	1	0	2	**3**	**4**	18	*	0	0	0	0
n/a																							
n/a																							
n/a																							
n/a																							
n/a																							
n/a																							
n/a																							
n/a																							
n/a																							
n/a																							
n/a																							
Total	1	2	0	**3**	0	5	16	**21**	0	0	0	**0**	3	0	2	**5**	**29**			0	0	0	0

n/a																							
n/a																							
n/a																							
n/a																							
n/a																							
n/a																							
n/a																							
n/a																							
n/a																							
n/a																							
n/a																							
n/a																							
n/a																							
n/a																							
n/a																							
n/a																							
n/a																							
n/a																							
n/a																							
Total																							

15:30	0	0	0	**0**	0	1	1	**2**	0	0	0	**0**	0	0	0	**0**	**2**			0	0	0	0
15:45	2	1	0	**3**	0	2	1	**3**	0	0	0	**0**	2	0	0	**2**	**8**		+	0	0	0	0
16:00	0	0	0	**0**	0	0	1	**1**	0	0	0	**0**	0	0	2	**2**	**3**		*	0	0	0	0
16:15	0	1	0	**1**	0	2	0	**2**	0	0	0	**0**	2	0	1	**3**	**6**	19	*	0	0	0	0
16:30	0	0	0	**0**	0	2	2	**4**	0	0	0	**0**	0	0	1	**1**	**5**	22	*	0	0	0	0
16:45	0	0	0	**0**	0	0	0	**0**	0	0	0	**0**	3	0	0	**3**	**3**	17		0	0	0	0
17:00	0	1	0	**1**	0	1	2	**3**	0	0	0	**0**	0	0	0	**0**	**4**	18		0	0	0	0
17:15	0	2	0	**2**	0	1	0	**1**	0	0	0	**0**	1	0	0	**1**	**4**	16		0	0	0	0
17:30	2	1	0	**3**	0	1	1	**2**	0	0	0	**0**	4	0	0	**4**	**9**	20		0	0	0	0
17:45	0	0	0	**0**	0	0	0	**0**	0	0	0	**0**	0	0	0	**0**	**0**	17		0	0	0	0
18:00	0	0	0	**0**	0	0	0	**0**	0	0	0	**0**	1	0	0	**1**	**1**	14		0	0	0	0
18:15	0	0	0	**0**	0	0	0	**0**	0	0	0	**0**	0	0	0	**0**	**0**	10		0	0	0	0
n/a																							
n/a																							
n/a																							
n/a																							
n/a																							
n/a																							
n/a																							
n/a																							
Total	4	6	0	**10**	0	10	8	**18**	0	0	0	**0**	13	0	4	**17**	**45**			0	0	0	0

AM Peak Period
Bikes

Sayward Rd @ Hunt Road
Wednesday, March 4, 2020

Time Period Begins	Sayward Rd NORTH Approach Left	Thru	Right	Total	Fowler Road SOUTH Approach Left	Thru	Right	Total	WEST Approach Left	Thru	Right	Total	Hunt Rd EAST Approach Left	Thru	Right	Total	Total Volume 15-min	Hour	Peak	N	S	W	E	Conflict 15 min	Hr
7:30	1	2	0	3	0	0	4	4	0	0	0	0	0	0	0	0	7			0	0	0	0	5	
7:45	0	0	0	0	0	0	0	0	0	0	0	0	0	0	0	0	0			0	0	0	0	0	
8:00	0	0	0	0	0	1	1	2	0	0	0	0	0	0	0	0	2			0	0	0	0	2	
8:15	0	0	0	0	0	1	0	1	0	0	0	0	1	0	0	1	2	11		0	0	0	0	2	9
8:30	0	0	0	0	0	1	3	4	0	0	0	0	1	0	0	1	5	9	*	0	0	0	0	5	9
8:45	0	0	0	0	0	2	1	3	0	0	0	0	0	0	0	0	3	12	*	0	0	0	0	3	12
9:00	0	0	0	0	0	0	6	6	0	0	0	0	0	0	0	0	6	16	+	0	0	0	0	6	16
9:15	0	0	0	0	0	0	1	1	0	0	0	0	1	0	2	3	4	18	*	0	0	0	0	3	17
n/a																									
n/a																									
n/a																									
n/a																									
n/a																									
n/a																									
n/a																									
n/a																									
n/a																									
n/a																									
n/a																									
Total	1	2	0	**3**	0	5	16	**21**	0	0	0	**0**	3	0	2	**5**	29			0	0	0	0		25
Avg Hr	1	1	0	**2**	0	3	8	**11**	0	0	0	**0**	2	0	1	**3**	15			0	0	0	0		

Peak hour of the intersection

Pk Hr	0	0	0	0	0	3	11	14	0	0	0	0	2	0	2	4	18	*		0	0	0	0		16
15x4	0	0	0	0	0	8	24	24	0	0	0	0	4	0	8	12	24	+		0	0	0	0		40
PHF	n/a	n/a	n/a	**n/a**	n/a	0.38	0.46	**0.58**	n/a	n/a	n/a	**n/a**	0.50	n/a	0.25	**0.33**	0.75			n/a	n/a	n/a	n/a		0.40

Peak hour of conflicting volumes for the intersection

Pk Hr	0	0	0	0	0	3	11	14	0	0	0	0	2	0	2	4	18	*		0	0	0	0		16
15x4	0	0	0	0	0	8	24	24	0	0	0	0	4	0	8	12	24	+		0	0	0	0		40
PHF	n/a	n/a	n/a	**n/a**	n/a	0.38	0.46	**0.58**	n/a	n/a	n/a	**n/a**	0.50	n/a	0.25	**0.33**	0.75			n/a	n/a	n/a	n/a		0.40

** Calculated peak hour occurs during the first or last hour of shift and therefore may be invalid. **

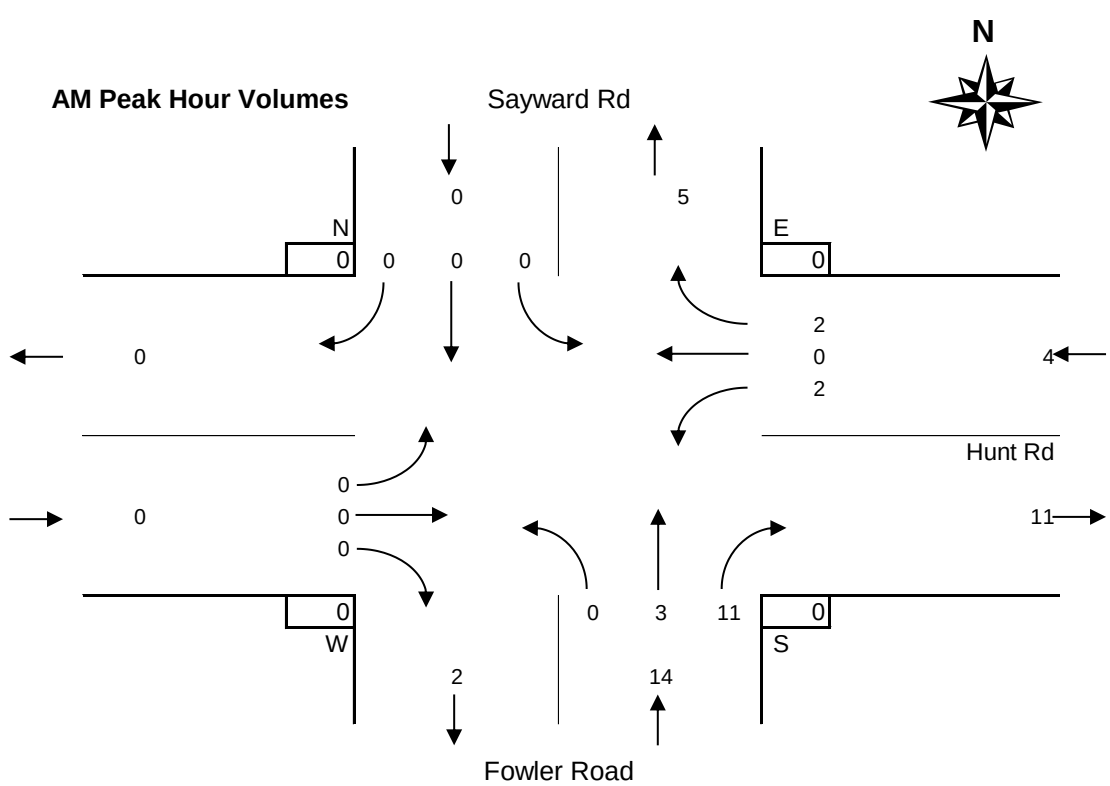

MD Peak Period
Bikes

Sayward Rd @ Hunt Road
Wednesday, March 4, 2020

Time Period Begins	Sayward Rd NORTH Approach				Fowler Road SOUTH Approach					WEST Approach			Hunt Rd EAST Approach				Total Volume		Peak					Conflict	
	Left	Thru	Right	Total	Left	Thru	Right	Total	Left	Thru	Right	Total	Left	Thru	Right	Total	15-min	Hour		N	S	W	E	15 min	Hr
n/a																									
n/a																									
n/a																									
n/a																									
n/a																									
n/a																									
n/a																									
n/a																									
n/a																									
n/a																									
n/a																									
n/a																									
n/a																									
n/a																									
n/a																									
n/a																									
Total																									
Avg Hr																									

Peak hour of the intersection

Pk Hr																		*							
15x4																		+							
PHF																									

Peak hour of conflicting volumes for the intersection

Pk Hr																		*							
15x4																		+							
PHF																									

MD Peak Hour Volumes

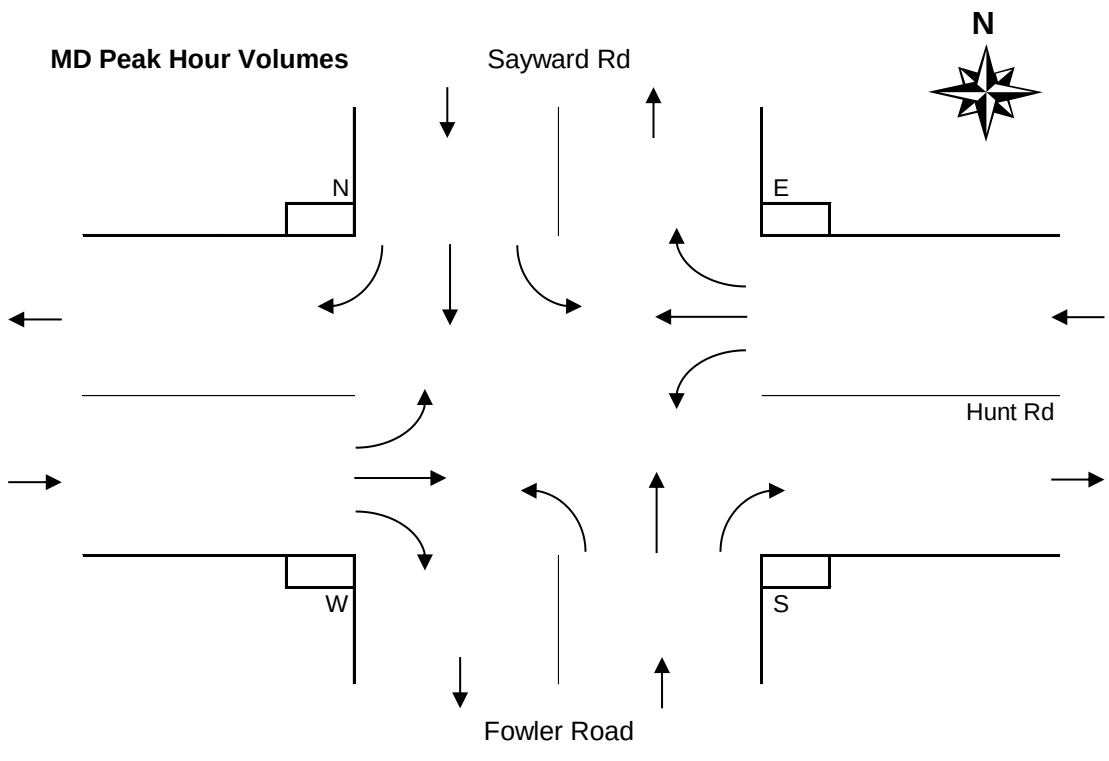

PM Peak Period
Bikes

Sayward Rd @ Hunt Road
Wednesday, March 4, 2020

Time Period Begins	Sayward Rd NORTH Approach Left	Thru	Right	Total	Fowler Road SOUTH Approach Left	Thru	Right	Total	WEST Approach Left	Thru	Right	Total	Hunt Rd EAST Approach Left	Thru	Right	Total	Total Volume 15-min	Hour	Peak	N	S	W	E	Conflict 15 min	Hr
15:30	0	0	0	0	0	1	1	2	0	0	0	0	0	0	0	0	2			0	0	0	0	2	
15:45	2	1	0	3	0	2	1	3	0	0	0	0	2	0	0	2	8		+	0	0	0	0	7	
16:00	0	0	0	0	0	0	1	1	0	0	0	0	0	0	2	2	3		*	0	0	0	0	3	
16:15	0	1	0	1	0	2	0	2	0	0	0	0	2	0	1	3	6	19	*	0	0	0	0	4	16
16:30	0	0	0	0	0	2	2	4	0	0	0	0	0	0	1	1	5	22	*	0	0	0	0	5	19
16:45	0	0	0	0	0	0	0	0	0	0	0	0	3	0	0	3	3	17		0	0	0	0	3	15
17:00	0	1	0	1	0	1	2	3	0	0	0	0	0	0	0	0	4	18		0	0	0	0	3	15
17:15	0	2	0	2	0	1	0	1	0	0	0	0	1	0	0	1	4	16		0	0	0	0	3	14
17:30	2	1	0	3	0	1	1	2	0	0	0	0	4	0	0	4	9	20		0	0	0	0	8	17
17:45	0	0	0	0	0	0	0	0	0	0	0	0	0	0	0	0	0	17		0	0	0	0	0	14
18:00	0	0	0	0	0	0	0	0	0	0	0	0	1	0	0	1	1	14		0	0	0	0	1	12
18:15	0	0	0	0	0	0	0	0	0	0	0	0	0	0	0	0	0	10		0	0	0	0	0	9
n/a																									
n/a																									
n/a																									
n/a																									
n/a																									
n/a																									
n/a																									
n/a																									
Total	4	6	0	**10**	0	10	8	**18**	0	0	0	**0**	13	0	4	**17**	45			0	0	0	0		35
Avg Hr	1	2	0	**3**	0	3	3	**6**	0	0	0	**0**	4	0	1	**6**	15			0	0	0	0		

Peak hour of the intersection

Pk Hr	2	2	0	4	0	6	4	10	0	0	0	0	4	0	4	8	22	*		0	0	0	0		16
15x4	8	4	0	12	0	8	8	16	0	0	0	0	8	0	8	12	32	+		0	0	0	0		32
PHF	0.25	0.50	n/a	**0.33**	n/a	0.75	0.50	**0.63**	n/a	n/a	n/a	**n/a**	0.50	n/a	0.50	**0.67**	0.69			n/a	n/a	n/a	n/a		0.50

Peak hour of conflicting volumes for the intersection

Pk Hr	2	2	0	4	0	6	4	10	0	0	0	0	4	0	4	8	22	*		0	0	0	0		16
15x4	8	4	0	12	0	8	8	16	0	0	0	0	8	0	8	12	32	+		0	0	0	0		32
PHF	0.25	0.50	n/a	**0.33**	n/a	0.75	0.50	**0.63**	n/a	n/a	n/a	**n/a**	0.50	n/a	0.50	**0.67**	0.69			n/a	n/a	n/a	n/a		0.50

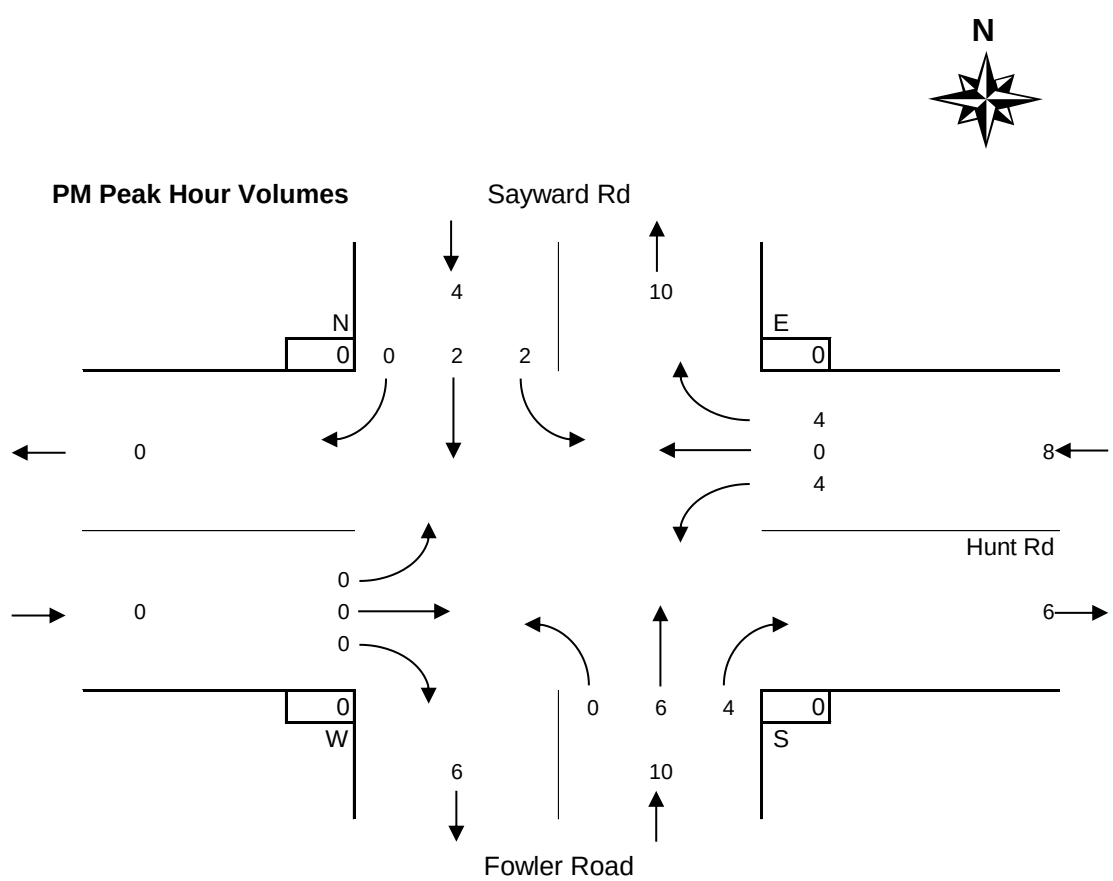

Period Hourly Averages
Bikes

Sayward Rd @ Hunt Road
Wednesday, March 4, 2020

Entire Survey Period
5 Hours

	Sayward Rd				Fowler Road								Hunt Rd							
	NORTH Approach				SOUTH Approach				WEST Approach				EAST Approach				Total			
	Left	Thru	Right	Total	Left	Thru	Right	Total	Left	Thru	Right	Total	Left	Thru	Right	Total	Volume	N	S	W	E
Total	5	8	0	**13**	0	15	24	**39**	0	0	0	**0**	16	0	6	**22**	74	0	0	0	0
Avg Hr	1	2	0	**3**	0	3	5	**8**	0	0	0	**0**	3	0	1	**4**	15	0	0	0	0

AM Peak Period
2 Hours

	Sayward Rd				Fowler Road								Hunt Rd							
	NORTH Approach				SOUTH Approach				WEST Approach				EAST Approach				Total			
Totals	Left	Thru	Right	Total	Left	Thru	Right	Total	Left	Thru	Right	Total	Left	Thru	Right	Total	Volume	N	S	W	E
Period	1	2	0	**3**	0	5	16	**21**	0	0	0	**0**	3	0	2	**5**	29	0	0	0	0
Avg Hr	1	1	0	**2**	0	3	8	**11**	0	0	0	**0**	2	0	1	**3**	15	0	0	0	0

MD Peak Period
Hours

	Sayward Rd				Fowler Road								Hunt Rd							
	NORTH Approach				SOUTH Approach				WEST Approach				EAST Approach				Total			
Totals	Left	Thru	Right	Total	Left	Thru	Right	Total	Left	Thru	Right	Total	Left	Thru	Right	Total	Volume	N	S	W	E
Total																				
Avg Hr																				

PM Peak Period
3 Hours

	Sayward Rd				Fowler Road								Hunt Rd							
	NORTH Approach				SOUTH Approach				WEST Approach				EAST Approach				Total			
Totals	Left	Thru	Right	Total	Left	Thru	Right	Total	Left	Thru	Right	Total	Left	Thru	Right	Total	Volume	N	S	W	E
Total	4	6	0	**10**	0	10	8	**18**	0	0	0	**0**	13	0	4	**17**	45	0	0	0	0
Avg Hr	1	2	0	**3**	0	3	3	**6**	0	0	0	**0**	4	0	1	**6**	15	0	0	0	0
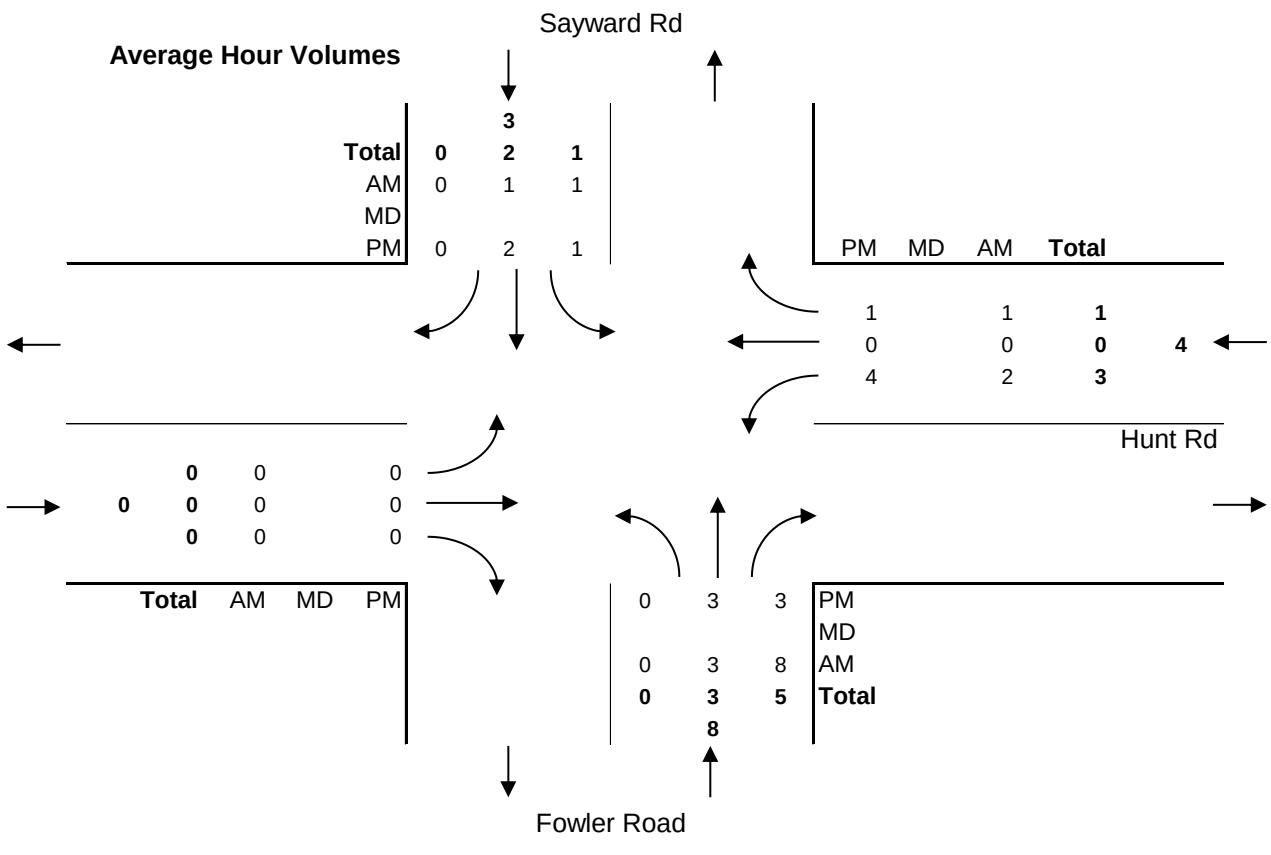
Average Hour Volumes